esco LIGHTING, INC.

S10000 and W10000 Series

Wall, Surface, Trunion or Pendant Mount
Cast Aluminum Square
Polycarbonate Lens

SPECIFICATIONS

Housing Cast aluminum (Alloy #319) one-piece construction. See finish note.
Reflector Flat one-piece aluminum painted with high gloss, high heat resistant white TGIC polyester powder for 90% reflectance.
Ballast Prewired C.W.A., H.P.F. core and coil with capacitor.
Lens Polycarbonate lens, gasketed with "O" ring. Secured with #8 screws. See ordering information.
Lamp Clear medium base (by others).
Lamp Holder Porcelain socket, 4 KV rated with nickel plated copper screw shell, spring loaded center contact, lamp grips, SF-2 leads (200? C). Impregnated gasket.
Surface Mounting Strap Heavy gauge steel universal cross bar with center lock-up. Mounts directly to outlet box. Surface mount only.
EZ5 Wall Bracket Assembly One-piece cast aluminum arm and canopy welded to reinforcement plate. Mounts to cast aluminum universal junction box plate. Plate has 1/4" neoprene gasket for sealing to wall. Quick disconnect wiring harness. Finished same as housing. See finish note.
Trunion Mount 12 Gauge (.1046") galvanized steel vertically adjustable. Finished same as housing. See finish note.
Pendant Mount Red Dot splice box with 1/2" I.P. stem. Finished same as housing. See finish note.
Finish Chip resistant TGIC powder polyester coating, electrostatic applied and baked. Custom colors are available. Consult Factory.

Wall mount

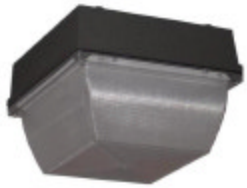
surface mount

trunion mount

Pendant mount

Labels: ETL, CETL listed & I.B.E.W labeled; suitable for wet location under covered ceiling. Wall mount listed wet location.
Fixture Warranty: The fixture mechanics are guaranteed to be free from defective material and workmanship, under normal installation and operating conditions, for five years from date of shipment from the factory. See General Terms and Conditions.
Photometric Information Contact factory.

SPECIFICATIONS SUBJECT TO CHANGE WITHOUT NOTICE.

Dimensions

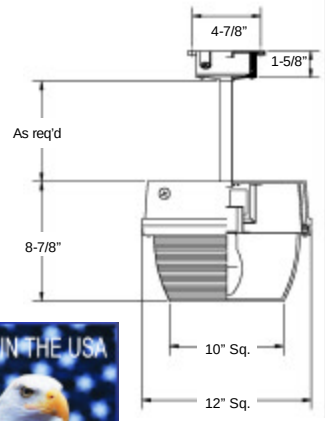

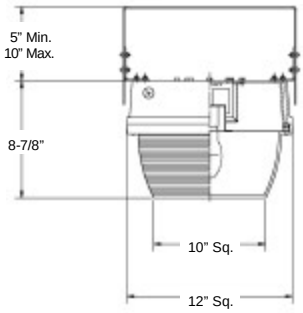

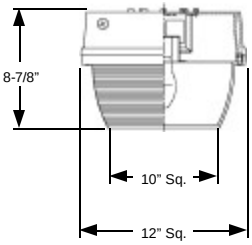

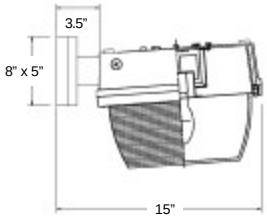

3254 North Kilbourn Avenue Chicago, Illinois 60641-4505
Phone: 773-427-7000 Fax: 800-217-1260 www.escolighting.com
A Woman-Owned Business
Established 1975

EPA Green Lights an Energy Star program Ally

esco LIGHTING, INC.

S10000 and W10000 Series

Wall, Surface, Trunion or Pendant Mount
Cast Aluminum Square
Polycarbonate Lens

HOW TO ORDER

Surface Mount Catalog Number	Light Source	Watts	Wall Mount Catalog Number	Light Source	Watts
S10012	HPS	50	W10012	HPS	50
S10013	HPS	70	W10013	HPS	70
S10014	HPS	100	W10014	HPS	100
S10015	HPS	150	W10015	HPS	150
S10022	MH	50	W10022	MH	50
S10023	MH	70	W10023	MH	70
S10024	MH	100	W10024	MH	100
S10025	MH	150	W10025	MH	150
S10026	MH	175	W10026	MH	175
S10027	MH Pulse Start	175	W10027	MH Pulse Start	175

Voltage

1= 120V
2= 208V
3= 240V
4= 277V
5= 480V
8= Multi-Tap wired for 277V
9= Multi-Tap unwired
0= 347V

Color Suffix: **BZ=** Textured Bronze, **BL=** Textured Black, **W=** Sky White, **Other** Consult Factory

EXAMPLE: **S10027BLTR-4** = 175W metal halide pulse start lamp , textured black, trunion mount, 277V.

MOUNTING OPTIONS

Suffix catalog number
TR= Adjustable trunion
(5" Minimum, 10" Maximun).

Suffix catalog number
P6x= Pendant mount
(x = required stem length in inches).

3254 North Kilbourn Avenue Chicago, Illinois 60641-4505
Phone: 773-427-7000 Fax: 800-217-1260 www.escolighting.com
A Woman-Owned Business
Established 1975

EPA Green Lights
an Energy Star program
Ally